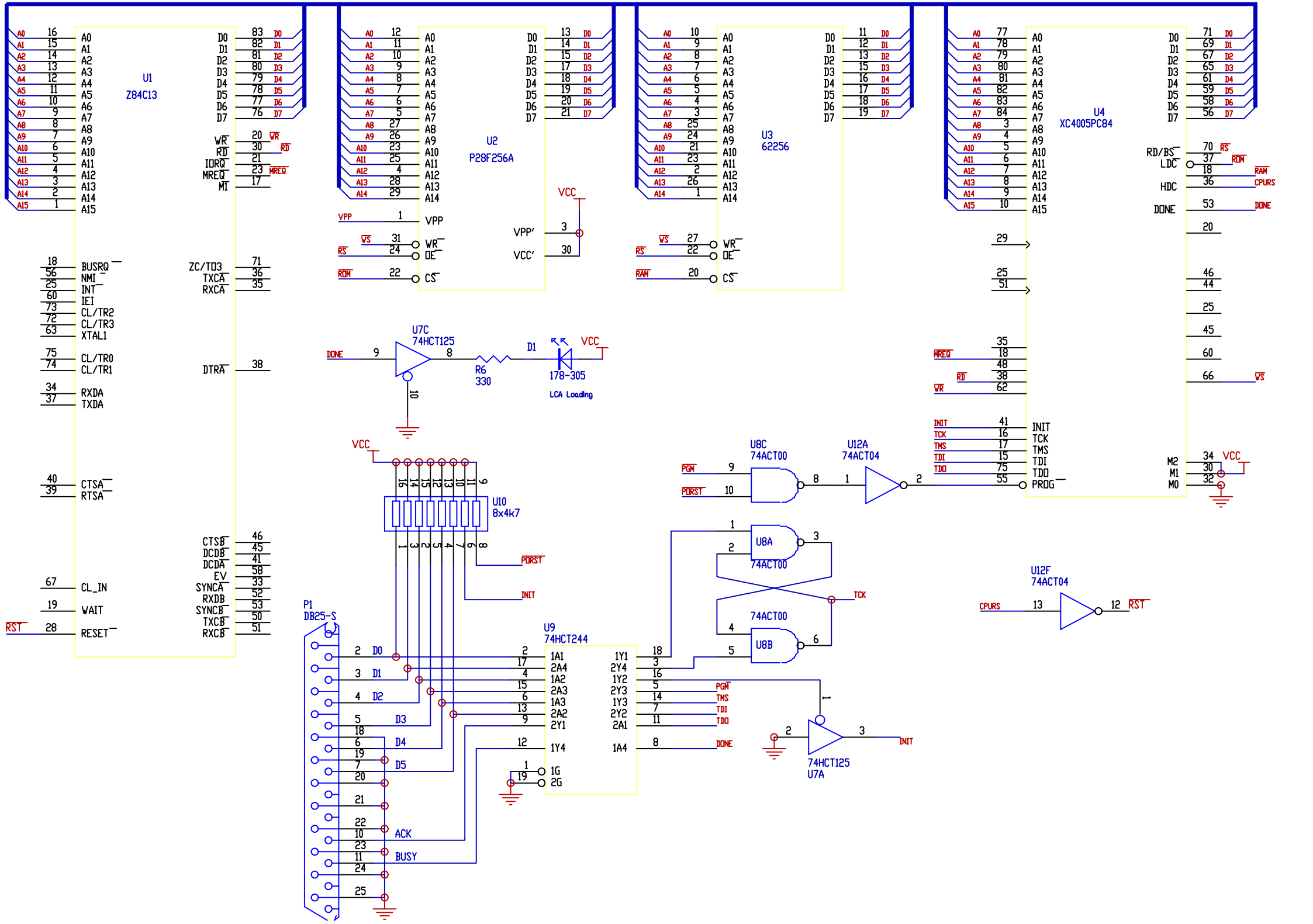
U1
Z84C13
U2
P28F256A
U3
62256
U4
XC4005PC84
U7C
74HCT125
R6
330
D1
178-305
LCA Loading
VCC
U10
8x4k7
U8C
74ACT00
U12A
74ACT04
U8A
74ACT00
U8B
74ACT00
U12F
74ACT04
P1
DB25-S
U9
74HCT244
74HCT125
U7A
DONE
PGM
PDRST
INIT
TCK
TMS
TDI
TDO
CPURS
RST
ACK
BUSY
RS
ROM
RAM
WR
RD
MREQ
WS
CS
OE
VPP
VPP'
VCC'
BUSRQ
NMI
INT
IEI
CL/TR2
CL/TR3
XTAL1
CL/TR0
CL/TR1
RXDA
TXDA
CTSA
RTSA
CL_IN
WAIT
RESET
ZC/TO3
TXCA
RXCA
DTRA
CTSB
DCDB
DCDA
EV
SYNCA
RXDB
SYNCB
TXCB
RXCB
IORQ
MI
RD/BS
LDC
HDC
DONE
M2
M1
M0
PROG